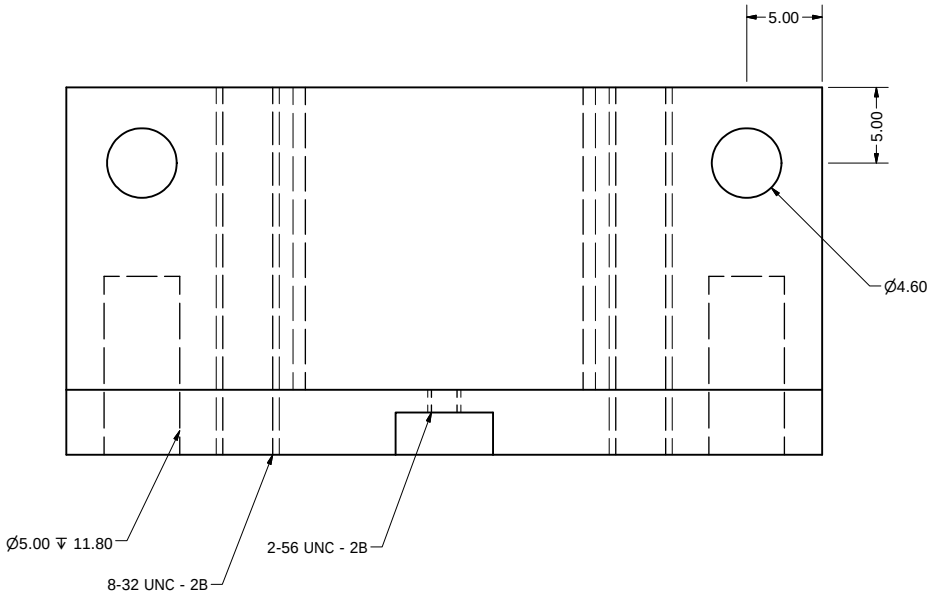

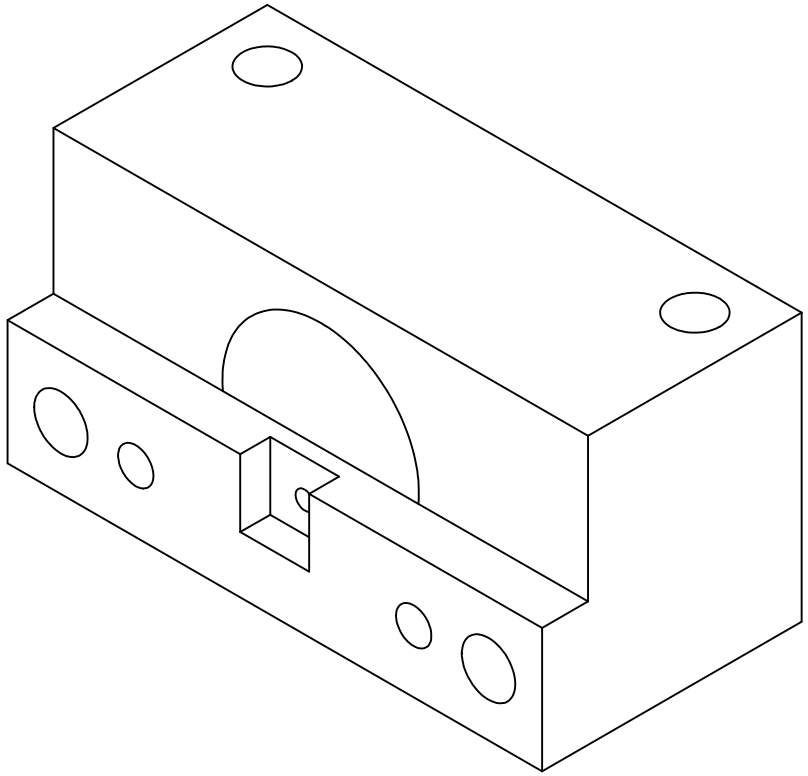

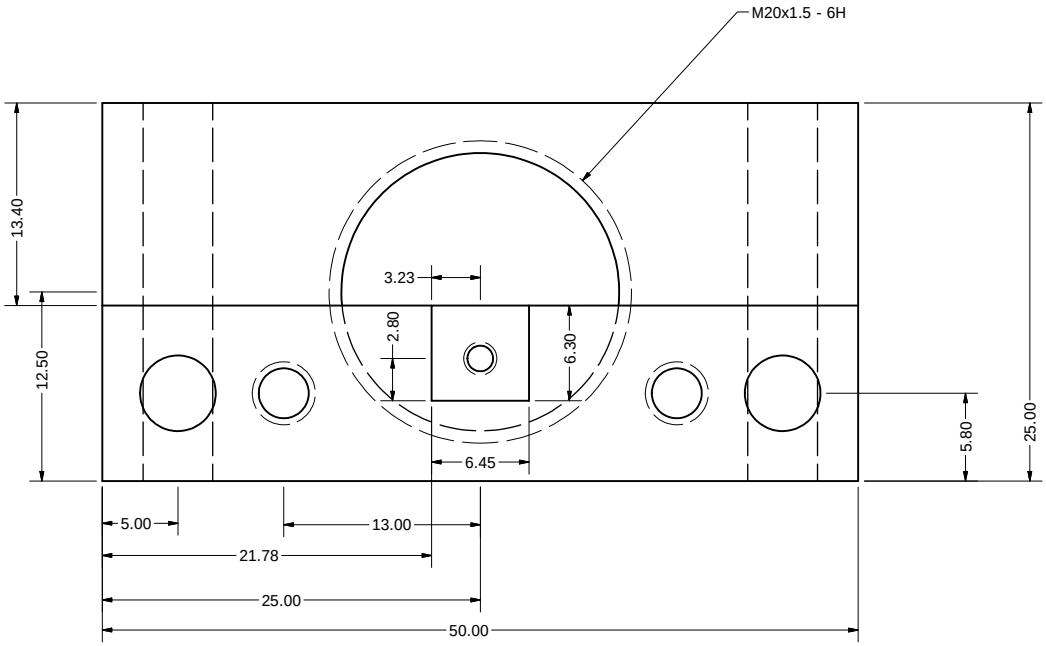

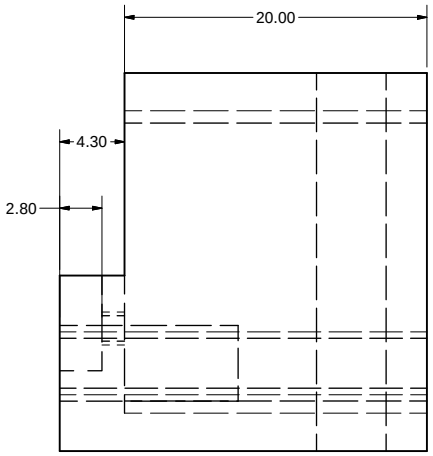

DRAWN Lab User	10/24/2006	
CHECKED		TITLE
QA		
MFG		
APPROVED		
		SIZE C · DWG NO Piece 1 · REV
		SCALE · SHEET 1 OF 1